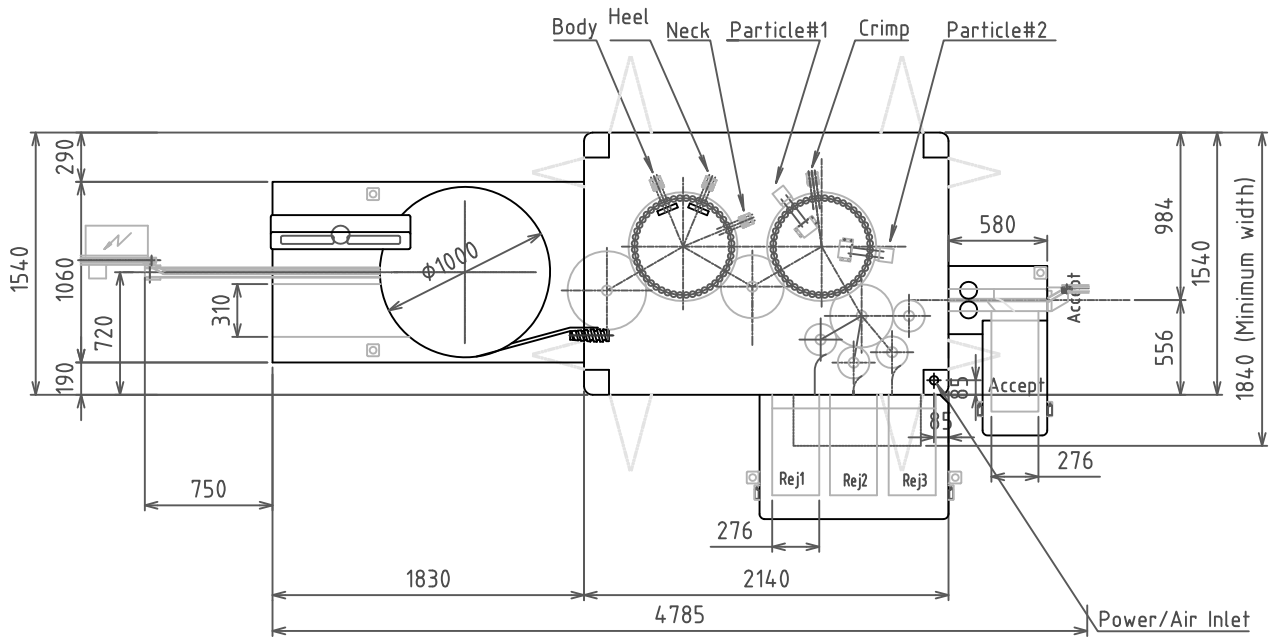

Type	AIM 5022
Container	Vials
Capacity	Max. 16,000/H
Power	4kVA
Air	4kg/cm² , 400NL/min
Weight	4,000kg

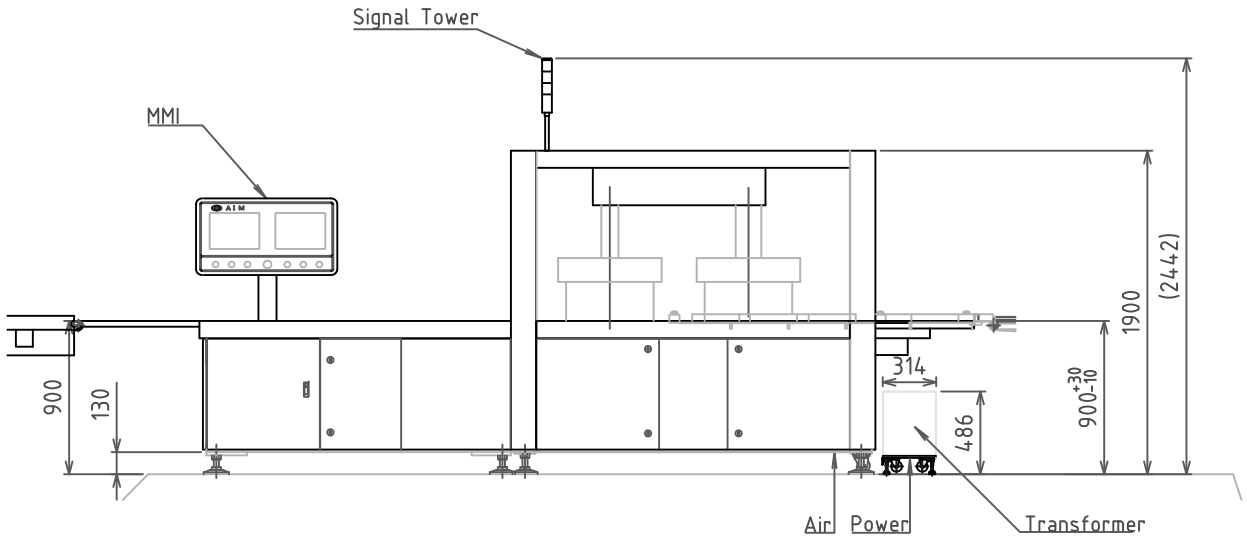

Eisai Co.,Ltd.
Tokyo,JAPAN

SAMPLE

mm

REFERENCE ONLY